NEW

FAULHABER

Linear Actuators

Gearhead with integrated Lead Screw, metric thread

1850 N

For combination with
DC-Micromotors
Brushless DC-Motors
Stepper Motors

Series 32L ... ML

Values at 22°C								
Number of gear stages		**1**	**1**	**1**	**2**	**2**	**3**	**4**
Reduction ratio [1] (rounded)		**1:1**	**3:1**	**3,6:1** **4,5:1** **6,6:1**	**9:1** **11:1**	**14:1** **16:1** **20:1** **24:1** **30:1** **44:1**	**41:1** **49:1** **59:1** **72:1** **89:1** **108:1** **131:1** **158:1** **196:1**	**178:1** **215:1** **267:1** **323:1** **401:1** **474:1** **588:1** **711:1** **862:1** **1 042:1** **1 294:1**
Continuous output speed, max. [2]	mm/s	33,5	31,6	29,6…20,2	12…9,85	11,9…3,79	4,47…0,94	1,03…0,14
Peak output speed, max. [2]	mm/s	83,3	41,7	44…24	13,9…11,4	14,9…4,73	5,69…1,19	1,31…0,18
Continuous input speed, max.	min^{-1}	2 000	5 700	6 400	6 500	10 000	11 000	11 000
Peak input speed, max.	min^{-1}	5 000	7 500	9 500	7 500	12 500	14 000	14 000
Continuous axial force, avg.	N	54	57	60…89	150…180	150…478	402…1850	1750…1850
Peak axial force, dynamic, max.	N	1 000	1 000	1 850	1 850	1 850	1 850	1 850
Peak axial force, static, max.	N	3 700	3 700	3 700	3 700	3 700	3 700	3 700
Output power, max.	W	9	9	9	5	5	3	2
Efficiency of gearhead/coupler, max.	%	95	92	92	82	82	78	65
Efficiency of screw, max.	%	16	16	16	16	16	16	16
Mass inertia incl. screw, max. [3]	gmm^2	3 760	630	630	463	463	199	85
Accuracy, screw standard length, max.	µm	171	172	172	172	172	172	172
Radial load, max. (15 mm from flange)	N	185	220	220	280	280	330	380
Gearhead backlash, at no-load, typical	°	0,31	0,6	0,6	0,6	0,6	0,6	0,6
Radial play (screw, 10 mm from flange)	mm	≤ 0,05	≤ 0,05	≤ 0,05	≤ 0,05	≤ 0,05	≤ 0,05	≤ 0,05
Axial play:								
– screw	mm	= 0	= 0	= 0	= 0	= 0	= 0	= 0
– nut	µm	144	144	144	144	144	144	144
Screw length from flange:								
– standard	mm	200	200	200	200	200	200	200
– max.	mm	450	450	450	450	450	450	450
Length without motor L2	mm	40,7	40,7	40,7	49,1	49,1	57,5	65,9
Mass [3]	g	207	220	220	280	280	340	400

Screw type		M10x1 right handed, screw direction of rotation same as motor shaft.
Screw material		stainless steel
Nut material		cylindric, lead-free brass
Housing material		stainless steel
Geartrain material		stainless steel
Bearings on output shaft		ball bearings, preloaded
Operating temperature range	°C	-30 … +120

[1] The reduction ratios are rounded, the exact values are available on request or at www.faulhaber.com.
[2] According to selected reduction ratio, screw supported
[3] Standard length and standard nut

Note:

The display shows the range of possible operation points of the drives at a given ambient temperature of 22°C.

The diagram indicates the recommended output speed in relation to the available output axial force.

For the stardard screw both supported and not, the diagram shows also the critical speeds and the buckling forces.

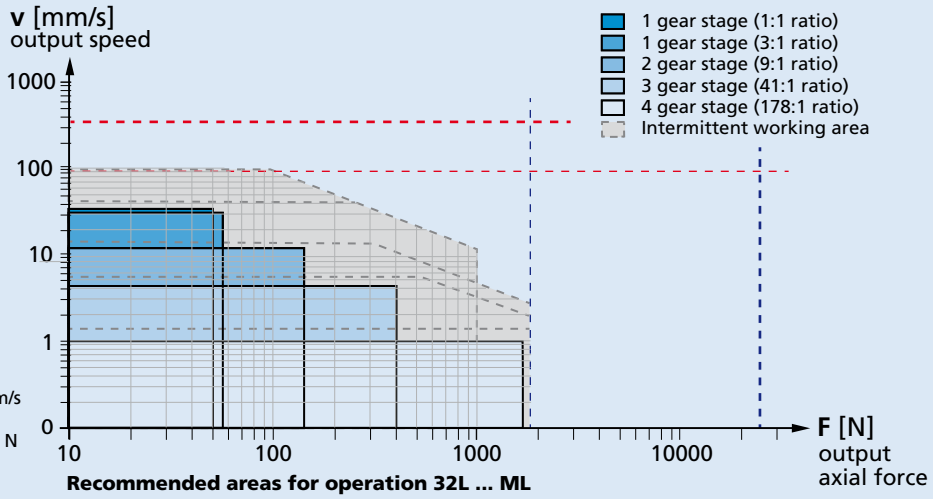

Recommended areas for operation 32L ... ML

For notes on technical data and lifetime performance refer to "Technical Information".

© DR. FRITZ FAULHABER GMBH & CO. KG
Specifications subject to change without notice.

Dimensional drawing

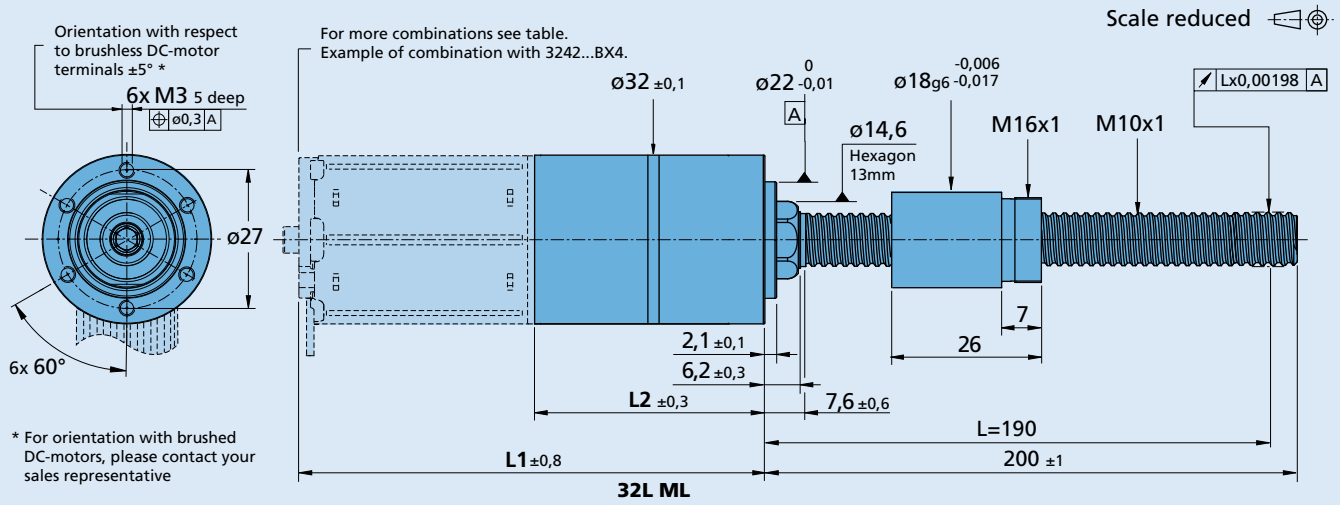

Options

Example product designation: **32L 30:1 KP1 ML 10x1 200 KWS1**

Option	Type	Description
KL1	Gearhead ambient conditions	Low temperature range of -55°C +100°C (KWL1 not required for ML screws)
KL2	Gearhead ambient conditions	Vacuum down to 10^{-5} Pa @22°C
KL3	Gearhead ambient conditions	Temperature range of -55°C +150°C and vacuum down to 10^{-9} Pa @60°C
KP1	Gearhead protection	IP54
KC1	Cable orientation	Motor cable/wires or terminals oriented at 15° CCW vs gearhead front threads
KC2	Cable orientation	Motor cable/wires or terminals oriented at 30° CCW vs gearhead front threads
KC3	Cable orientation	Motor cable/wires or terminals oriented at 45° CCW vs gearhead front threads
200	Screw	Standard length (200 mm), length from 50 mm up to 450 mm are available with 5 mm steps
KWS1	Screw	Bearing tip/journal (Ø 6mm, L=10mm)
KWL0	Screw ambient conditions	Not lubricated
KWL2	Screw ambient conditions	Vacuum down to 10^{-5} Pa @22°C
KWL3	Screw ambient conditions	Temperature range of -55°C +150°C and vacuum down to 10^{-9} Pa @60°C
KWN2	Nut	Cylindrical plastic nut with double 8 mm flats
KWN3	Nut	Flanged lead-free brass nut
KWN4	Nut	Flanged plastic nut
KWN5	Nut	No backlash lead-free brass nut
KWN8	Nut	Cylindrical lead-free brass nut with double 8 mm flats
KWN9	Nut	No nut

Note: Specified values may differ from the standard values depending on the option. Please consult your sales representative for further information.

Product combination

Number of gear stages		1	2	3	4
L2 [mm] = length without motor		40,7	49,1	57,5	65,9
L1 [mm] = length with motor	2642X...CR/CXR	85,6	94,0	102,4	110,8
	2657X...CR/CXR	100,6	109,0	117,4	125,8
	2668X...CR	111,6	120,0	128,4	136,8
	3242X...CR	85,6	94,0	102,4	110,8
	3257X...CR	100,6	109,0	117,4	125,8
	3272X...CR	115,6	124,0	132,4	140,8
	2250X...BX4	95,4	103,8	112,2	120,6
	3242X...BX4	87,8	96,2	104,6	113,0
	3268X...BX4	113,8	122,2	130,6	139,0
	2264X...BP4	107,6	116,0	124,4	132,8
	3274X...BP4	121,7	130,1	138,5	146,9
	3056X...B	99,6	108,0	116,4	124,8
	3564X...B	107,6	116,0	124,4	132,8
	3216X...BXTR	59,6	68,0	76,4	84,8
	3216X...BXTH	60,4	68,8	77,2	85,6
	AM3248...10	85,6	94,0	102,4	110,8

© DR. FRITZ FAULHABER GMBH & CO. KG
Specifications subject to change without notice.